Operating Instructions

Vacuum Transmitters for Diaphragm & Pirani Sensors 24 VDC Power

With Pirani Sensors

- .01 to 100 mTorr
- .01 to 100 X 10^{-3} mbar
- .001 to 13.3 Pa
- 1 to 2000 mTorr
- .001 to 2 mbar
- 0.1 to 200 Pa
- .01 to 20 Torr
- .01 to 26 mbar
- 1 to 2660 Pa

With Diaphragm Sensors

- 1 to 1500 Torr
- 1 to 2000 mbar
- 0.1 to 200.0 kPa
- Atmos. to 30 in. Hg

Vacuum Transmitters for Diaphragm & Pirani Sensors 24 VDC Power

• .01 to 100 mTorr • .01 to 100 X 10^{-3} mbar • .001 to 13.3 Pa

• 1 to 2000 mTorr • .001 to 2 mbar • 0.1 to 200 Pa

• .01 to 20 Torr • .01 to 26 mbar • 1 to 2660 Pa

• 1 to 1500 Torr • 1 to 2000 mbar • 0.1 to 200.0 kPa

• Atmos. to 30 in. Hg

Contents

Vacuum Transmitters for Diaphragm & Pirani Sensors 24 VDC Power

- **.01 to 100 mTorr • .01 to 100 X 10^{-3} mbar • .001 to 13.3 Pa**
- **1 to 2000 mTorr • .001 to 2 mbar • 0.1 to 200 Pa**
- **.01 to 20 Torr • .01 to 26 mbar • 1 to 2660 Pa**
- **1 to 1500 Torr • 1 to 2000 mbar • 0.1 to 200.0 kPa**
- **Atmos. to 30 in. Hg**

These vacuum transmitters are available with Pirani or Diaphragm sensors in ranges from 10^{-5} Torr to 1500 Torr. Instruments are also available calibrated in microns, in. Hg, PSI, mbar, and Pascal.

The basic transmitter has a non-linear 0 to 5 VDC output and an optional digital display is available. Transmitters with the digital display have a linear 0 to 2 VDC output. We recommend that the gauge tube cable with the connector wired to one end be puchased with the transmitter. Cables up to 500 feet (150 m) can be used if wire gauge is #22 or larger.

Specifications

***Absolute & Differential* Vacuum Gauges/Transmitters**

Power: Gauges operate from 12 to 35 VDC power, 150 mA. for all ranges except .01 to 20 Torr which requires 300 mA.

Response time: With VRC Pirani; 0.3 sec time constant. With VRC Diaphragm tubes; less than 400 milliseconds.

Accuracy: Pirani Gauges better than 5% of value or ±3 mT. whichever is larger. Diaphragm Gauges 1% of reading or ± 2 Torr whichever is larger.

Relay: SPDT contacts rated for 5A @ 115 VAC, non-inductive.

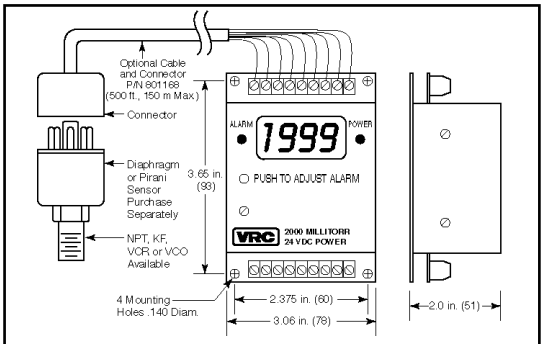

Remote Sensor Absolute or Differential

Pirani Gauges

.01 to 100 mTorr • .01 to 100 X 10^{-3} mbar • .001 to 13.3 Pa

Linear analog output for 100 mT transmitters with digital display 0 to 1 volts, 1 mV = 1 mTorr

Non-linear analog output for 100 mT transmitters without digital display and linearizer.

OUTPUT SIGNAL VOLTS	PRESSURE in mTorr	PRESSURE in mbar	PRESSURE in Pascal
0.000	0.00	.00000	.000
0.013	0.05	.00006	.006
0.026	0.10	.00013	.013
0.062	0.25	.00033	.033
0.121	0.50	.00066	.066
0.180	0.75	.00100	.100
0.239	1.00	.00133	.133
0.567	2.50	00333	.333
1.065	5.00	.00606	.666
1.504	7.50	.01000	1.000
1.890	10.00	.01333	1.333
2.225	12.50	.01666	1.666
2.516	15.00	.02000	2.000
2.770	17.50	.02332	2.332
2.992	20.00	.02666	2.666
3.354	25.00	.03332	3.332
3.639	30.00	.04000	4.000
4.054	40.00	.05332	5.332
4.765	75.00	0.09997	9.997
5.000	100.0	0.13330	13.333

Pirani Gauges

• .01 to 100 mTorr • .01 to 100 X 10^{-3} mbar • .001 to 13.3 Pa

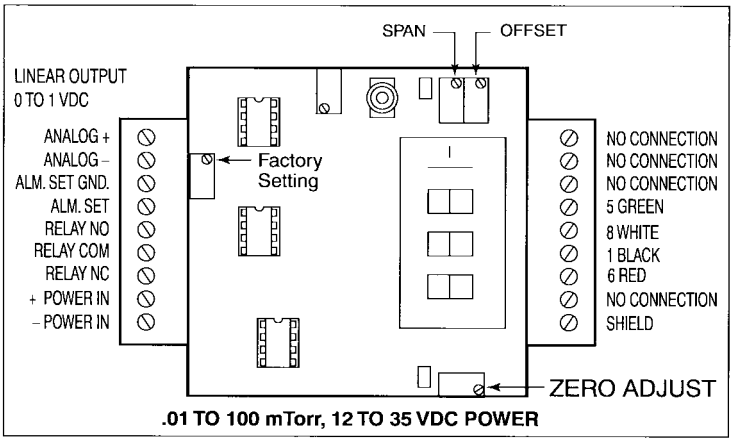

Gauge with Display

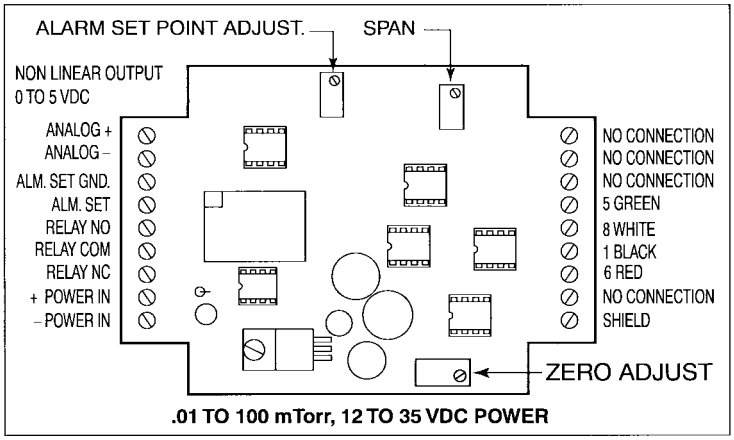

Gauge with No Display

Pirani Gauges

• 1 to 2000 mTorr • .001 to 2 mbar • 0.1 to 200 Pa

Linear analog output for 2000 mT transmitters with digital display 0 to 2 volts, 1 mV =1 mTorr

Non-linear analog output for 2000 mT transmitters without digital display and linearizer.			
OUTPUT SIGNAL VOLTS	PRESSURE in mTorr	PRESSURE in mbar	PRESSURE in Pascal
0.000	0.0	0.0	0.0
0.052	5.0	6	0.7
0.105	10.0	13	1.3
0.207	20.0	27	2.7
0.499	50.0	67	6.6
0.726	75.0	100	10.0
0.937	100.0	133	13.3
1.210	135.0	180	19.8
1.319	150.0	200	20.0
1.493	175.0	233	23.3
1.655	200.0	267	26.6
2.450	350.0	467	46.6
2.662	400.0	533	53.2
3.024	500.0	666	66.5
3.686	750.0	1000	99.8
3.969	900.0	1200	119.7
4.127	1000.0	1,333	133.0
4.402	1250.0	1,666	166.3
4.674	1500.0	2,000	200.0
4.856	1750.0	2,333	232.7
5.000	2000.0	2,666	266.0

Pirani Gauges

• 1 to 2000 mTorr • .001 to 2 mbar • 0.1 to 200 Pa

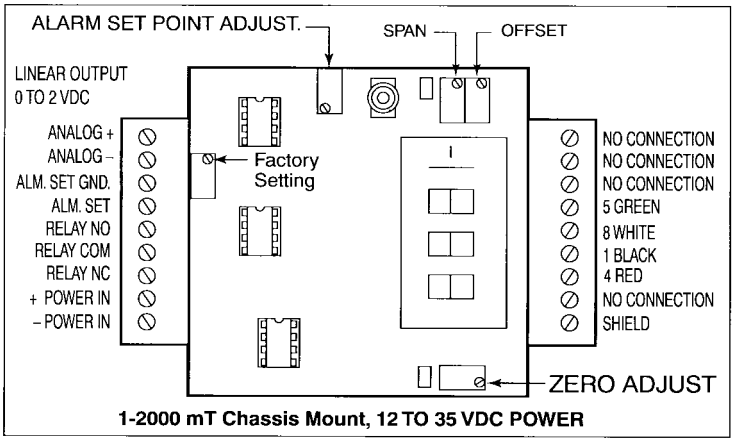

Gauge with Display

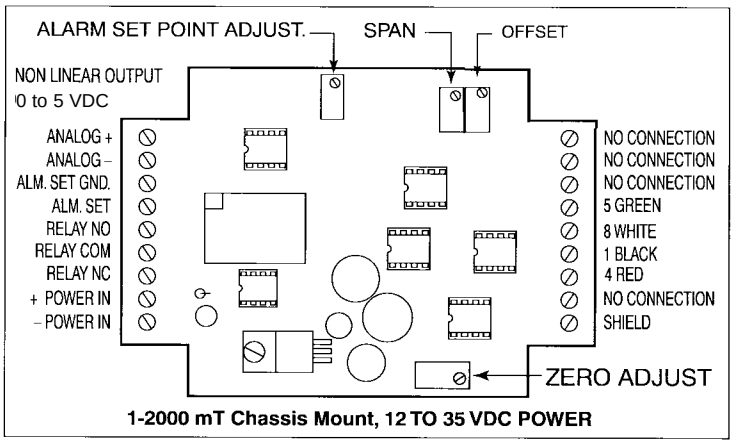

Gauge with No Display

Pirani Gauges

• .01 to 20 Torr • .01 to 26 mbar • 1 to 2660 Pa

Linear analog output for 20 Torr transmitters with digital display 0 to 2 volts, 1 mV =10 mTorr

Non-linear analog output for 20 Torr transmitters without digital display and linearizer.

OUTPUT SIGNAL VOLTS	PRESSURE in Torr	PRESSURE in mbar	PRESSURE in Pascal
0.000	0.000	0.000	0
0.011	0.010	0.013	1.33
0.072	0.050	0.067	6.65
0.149	0.100	0.133	13.3
0.371	0.250	0.333	33.25
0.703	0.500	0.667	66.5
0.989	0.750	1.000	99.75
1.239	1.000	1.333	133
1.997	2.000	2.670	266
2.530	3.000	4.000	399
2.930	4.000	5.330	532
3.243	5.000	6.670	665
3.800	6.000	8.000	798
3.816	7.000	9.330	931
3.899	8.000	10.670	1064
4.057	9.000	12.000	1197
4.195	10.000	13.330	1333
4.482	12.500	16.660	1663
4.695	15.000	20.000	1995
4.864	17.500	23.330	2328
5.000	20.000	26.660	2660

Pirani Gauges

• .01 to 20 Torr • .01 to 26 mbar • 1 to 2660 Pa

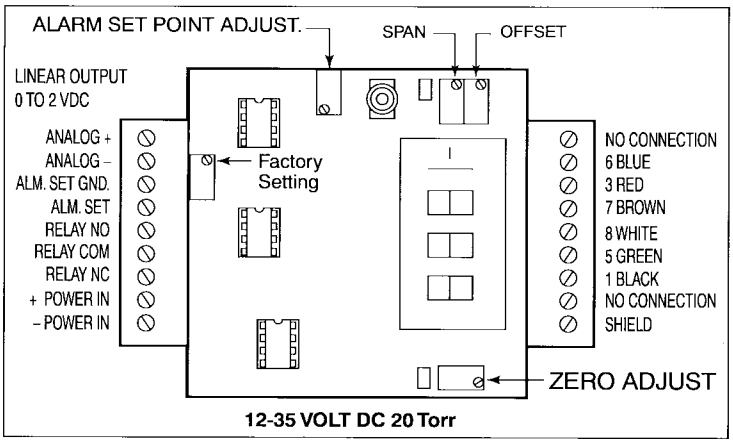

Gauge with Display

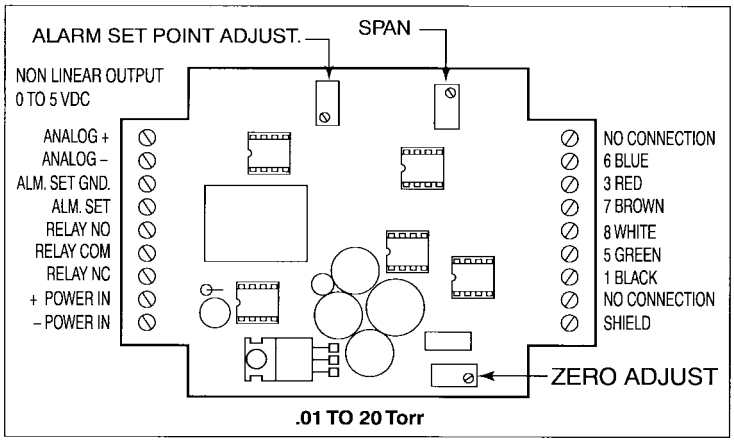

Gauge with No Display

Diaphragm Gauges

• 1 to 1500 Torr • 1 to 2000 mbar • 0.1 to 200.0 kPa

1 to 1500 Torr
Linear analog output for 1500 Torr transmitters with or without digital display is 0 to 1.500 VDC, 1 mV =1 Torr

1 to 2000 mbar
Linear analog output for 2000 mbar transmitters with or without digital display is 0 to 2.000 VDC, 1 mV =1 mbar

0.1 to 200.0 kPa
Linear analog output for 200.0 kPa transmitters with or without digital display is 0 to 2.000 VDC, 1 mV = 0.1 kPa

Diaphragm Gauges

• 1 to 1500 Torr • 1 to 2000 mbar • 0.1 to 200.0 kPa

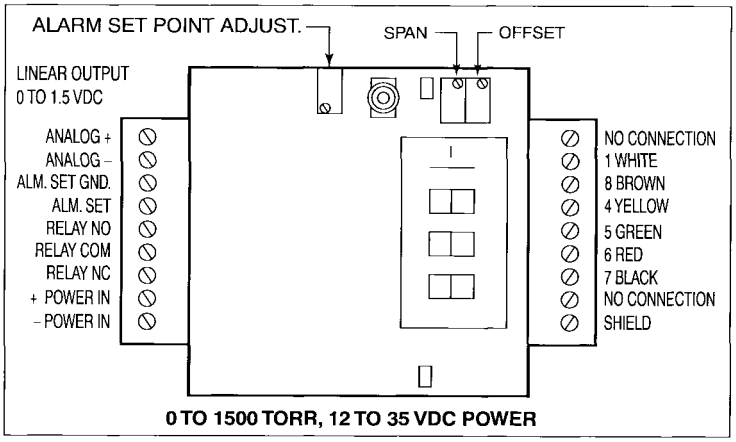

Gauge with Display

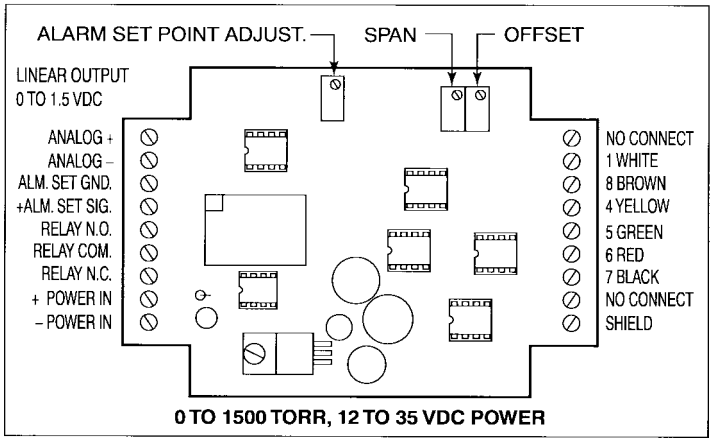

Gauge with No Display

Diaphragm Gauges

• Atmos. to 30 in. Hg

Linear analog output for 30 in. Hg transmitters with digital display is 0 to +300 mV, 1 mV = 0.1 in. Hg

Linear analog output for 30 in. Hg transmitters without digital display and linearizer.

OUTPUT SIGNAL VOLTS	PRESSURE in inches Hg	OUTPUT SIGNAL VOLTS	PRESSURE in inches Hg
0.000	Atmosphere	0.240	24.0
0.050	5.0	0.250	25.0
0.100	10.0	0.260	26.0
0.200	20.0	0.270	27.0
0.210	21.0	0.280	28.0
0.220	22.0	0.290	29.0
0.230	23.0	0.300	30.0

Gauge Pressure vs. Absolute Pressure

Please note that this is a “Gauge” pressure instrument. The other instruments in this manual are built to measure pressure in “Absolute” units such as Torr, Microns, and mbar. “Gauge” pressure means that atmospheric pressure is used as the reference for zero and 29.92 in. Hg designates high vacuum. “Gauge” pressure measurement can be useful in certain applications such as determining if a vacuum chamber is actually at atmospheric pressure so that the door can be opened safely. But, because the zero of “Gauge” measurements changes with atmospheric pressure the entire scale also changes. For example, if you are reading 28.00 inches Hg and the next day your instrument reads 28.39 inches Hg it may be that your pump is working better or it may be that a storm moved into your area and atmospheric pressure dropped. Changes in altitude also affect the readings of “Gauge” pressure instruments. For example, there is a difference of 5 inches Hg (127 Torr) between sea level and Denver, Colorado.

Diaphragm Gauge

- **Atmos. to 30 in. Hg**

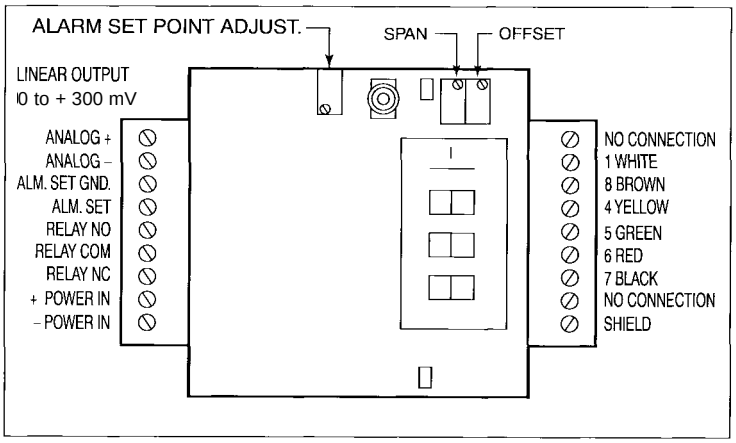

Gauge with Display

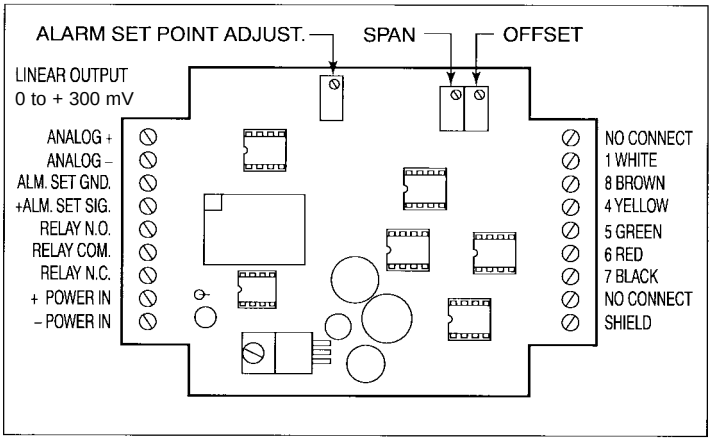

Gauge with No Display

Calibration of Transmitter

Two methods for calibrating these transmitters are described below.

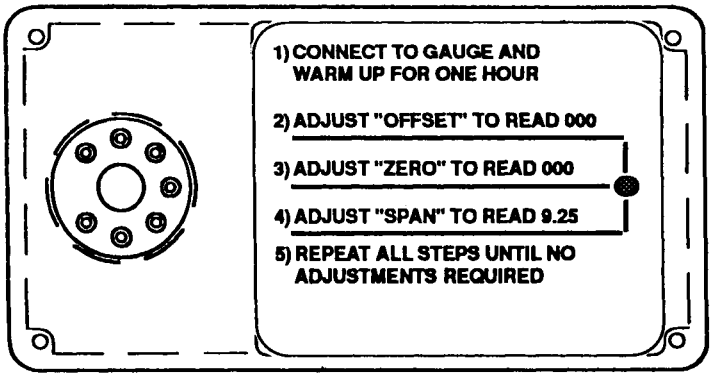

Calibration using the Reference Gauge Calibrator

This method requires a reference gauge calibrator, and for transmitters without the optional digital display, you will also need a digital voltmenter with an accuracy of ± 0.1 mV or better and a current calibration certificate.

Purchase the calibrator from the vacuum gauge manufacturer or your supplier. And be sure that the calibrator matches the range of your instrument.

Connect the calibrator in place of the gauge tube and follow the instructions on the front panel of the calibrator.

Calibration using a Manometer and Vacuum System

This method requires a high vacuum system and a certified precision calibration "standard" such as a capacitance manometer. If your transmitter does not have a digital display a high quality digital voltmeter will be required. Be sure the instrument has been turned on with a gauge tube installed for at least one hour before calibrating.

100 mTorr and 2000 mTorr Pirani (See pg. 3 for 100 mT circuit board map & pg. 5 for 2000 mT circuit board map)

1. Short pins (#5 green wire and #8 white wire) on the terminal strip together. The tube does not have to be disconnected. Locate the “Offset” pot and adjust so the digital display reads “000”. Remove the wire short from between pins 5 and 8.

2. Pump the tube to hard vacuum (1 hour for 100 mT and 30 minutes for 2000 mTorr. Locate the “Zero” pot and adjust so the digital display reads “000”. Note: Hard vacuum means 10^{-6} Torr or lower for 100 mT; 10^{-5} Torr or lower for 2000 mT instruments.

3. Raise the pressure in the system to a known upscale point.
100 mT = 40.00 mT upscale point; 2000 mT = 900 mT upscale point.
Locate the “Span” pot and adjust so the digital display reads the proper upscale number.

4. Repeat steps 1, 2, and 3 until no further adjustments are necessary.

20 Torr Pirani Transmitter (See pg. 7 for circuit board map)

1. Short pins (#6 blue wire and #7 brown wire) on the terminal strip together. The tube does not have to be disconnected. Locate the “Offset” pot and adjust so the digital display reads “000”. Remove the wire short from between pins 6 and 7.

2. Pump the tube to hard vacuum for 30 minutes. Locate the “Zero” pot and adjust so the digital display reads “0.00”. Note: Hard vacuum means 10^{-4} Torr or lower for 20 Torr instruments.

3. Raise the pressure in the system to a known upscale point.
20 T = 9 Torr upscale point.
Locate the “Span” pot and adjust so the digital display reads “9.10”

4. Repeat steps 1, 2, and 3 until no further adjustments are necessary.

1500 Torr Diaphragm Transmitter (See pg. 9 for circuit board map)

There are only 2 calibration adjustments that are normally necessary to re-standardize the instrument. One is an offset adjustment. The second is a span adjustment to set up scale tracking at some known pressure.

Plug in the power cord of the instrument for at least 30 minutes before calibrating.

1. Pump the transducer to “hard vacuum” (The term “hard vacuum” refers to any pressure lower than .1 Torr (100 mT). This is a “relative zero” below which the transducer no longer changes output. It need not be known as long as you are sure it is this low.) Adjust the OFFSET pot until the meter reads 0.

2. Vent the transducer to atmosphere. Call the nearest airport weather station and obtain the immediate barometric pressure. Ask for “station pressure” not altimeter setting. Multiply the figure you are given for barometric pressure by 25.4 to convert to mmHg (Torr) from inches Hg. Then,

adjust the “Span” pot until the display reads that pressure.

For example, if you are in Pittsburgh and you are at 636 ft. altitude on a standard day the following is true: at sea level the Std. Barometer is 29.92 in Hg = 760 Torr (29.92 X 25.4 = 759.968 Torr).

This is the altimeter setting for an aircraft, so that at landing the plane’s altimeter reads 636 ft. (At sea level the altimeter reads 000.)

Multiply the station pressure by 25.4 to convert inches Hg. to Torr and adjust the span to read the calculated number which in the above example is 743 Torr.

To obtain this information, look in the phone book under US Government, Transportation Dept., and call the number for “Pilot One Call Briefing.” Ask for the “Station Pressure”. Tell them your application is for industrial calibration purposes.

Atmosphere to 30 in. Hg Diaphragm Transmitter (See pg. 11 for circuit board map)

Zero adjustment is made by exposing the transducer to atmospheric pressure and setting the “Offset” pot to read 000 on the meter.

Pump the transducer to a vacuum that is at least 2 mmHg (Torr) absolute or lower. It need not be known as long as it is less than the 2 mm Hg. Obtain the correct barometric pressure and adjust the pot marked “Span” to read the barometric pressure.

To obtain the correct barometric pressure call the “FAA Pilot one call briefing” line at your local airport. Ask for the Station Pressure, not the Altimeter setting.

Gauge Tube Wiring

The gauge tube can be checked with an ohmmeter between pins 1 and 5 to verify that the sensor is good. Generally, the reading is less than 2.5 ohms if good; 900 ohms if the sensor is broken.

The actual readings for each type of tube should be as follows:

	SENSOR PINS 1 TO 5 BLACK AND GREEN WIRE APPROXIMATE RESISTANCE
100 mT	2.4 Ohms
2000 mT	2.1 Ohms
20 Torr	1.3 Ohms

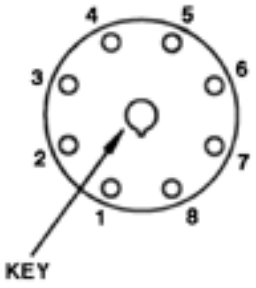

Vacuum Research Corporation
2419 Smallman Street • Pittsburgh, PA 15222 USA
(800) 426-9340 • (412) 261-7630 • FAX: (412) 261-7220
e-mail: vrc@vacuumresearchcorp.com

Printed 7/26/03